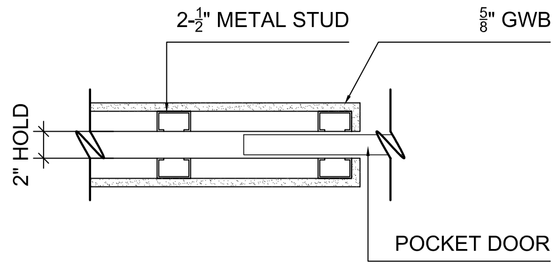

1 A130 PLAN DETAIL
1-1/2"=1'-0"

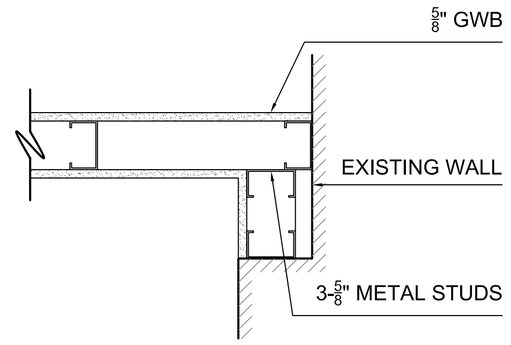

2 A130 PLAN DETAIL
1-1/2"=1'-0"

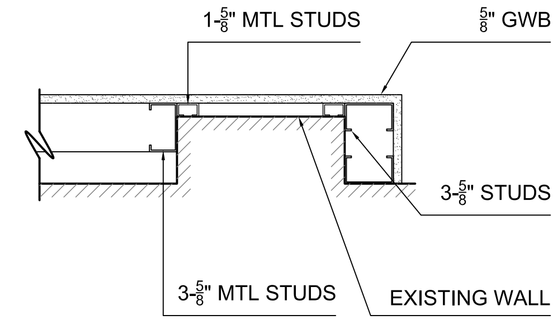

3 A130 PLAN DETAIL
1-1/2"=1'-0"

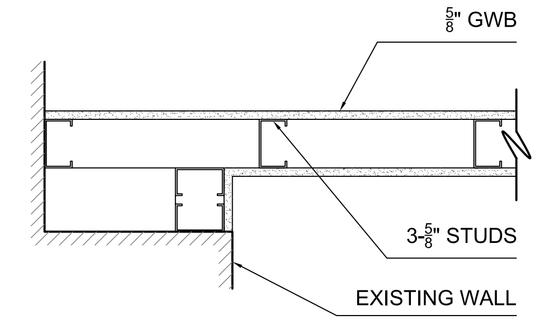

4 A130 PLAN DETAIL
1-1/2"=1'-0"

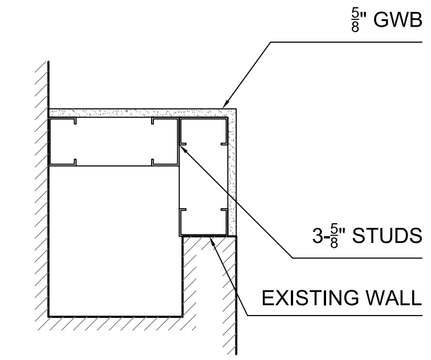

5 A130 PLAN DETAIL
1-1/2"=1'-0"

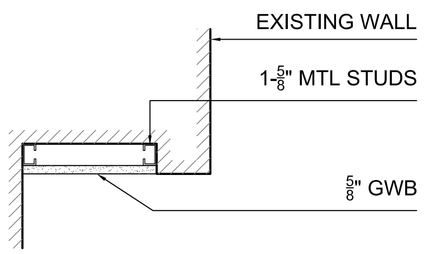

6 A130 PLAN DETAIL
1-1/2"=1'-0"

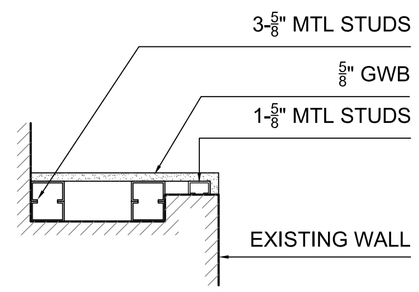

7 A130 PLAN DETAIL
1-1/2"=1'-0"

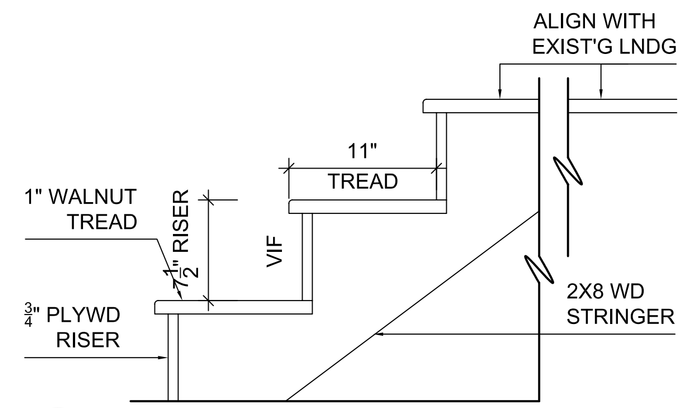

8 A130 PLAN DETAIL
1-1/2"=1'-0"

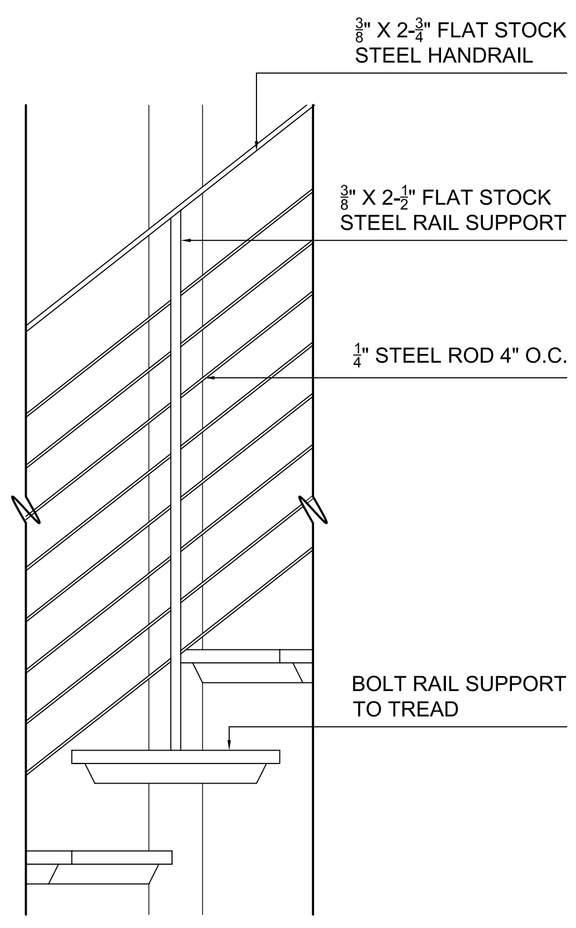

9 A130 RAILING DETAIL
1-1/2"=1'-0"

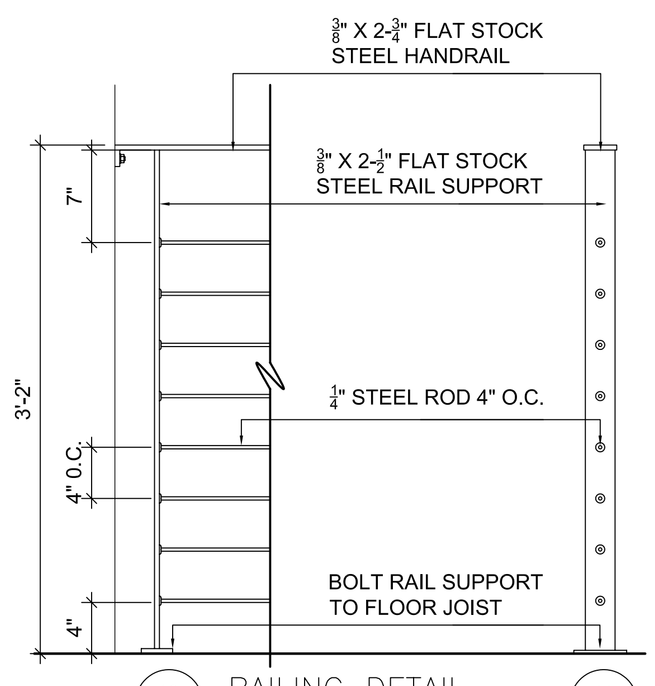

10 A130 RAILING DETAIL
1-1/2"=1'-0"

11 A130 RAILING DETAIL
1-1/2"=1'-0"

NOTE: For all railing connections, provide 5/8"x6" lag bolts for all connections to floors and walls. Provide blocking where required.

[design by process]

1113 DAY STREET
PHILADELPHIA PA 19125
215.510.0318

GIRARD AVE. CONDOS

204-206 GIRARD AVE.
PHILADELPHIA, PA 19125

SUBMISSION:	DATE:
PERMIT SET	04/24/2009

DATE:
04/24/2009

SCALE:
AS NOTED

PLAN, STAIR AND RAILING DETAILS

SHEET NO.
A130